RTU8191 Installation	95.05.18	JCS	POLYBUS INTERNATIONAL	**Application Note - 119**

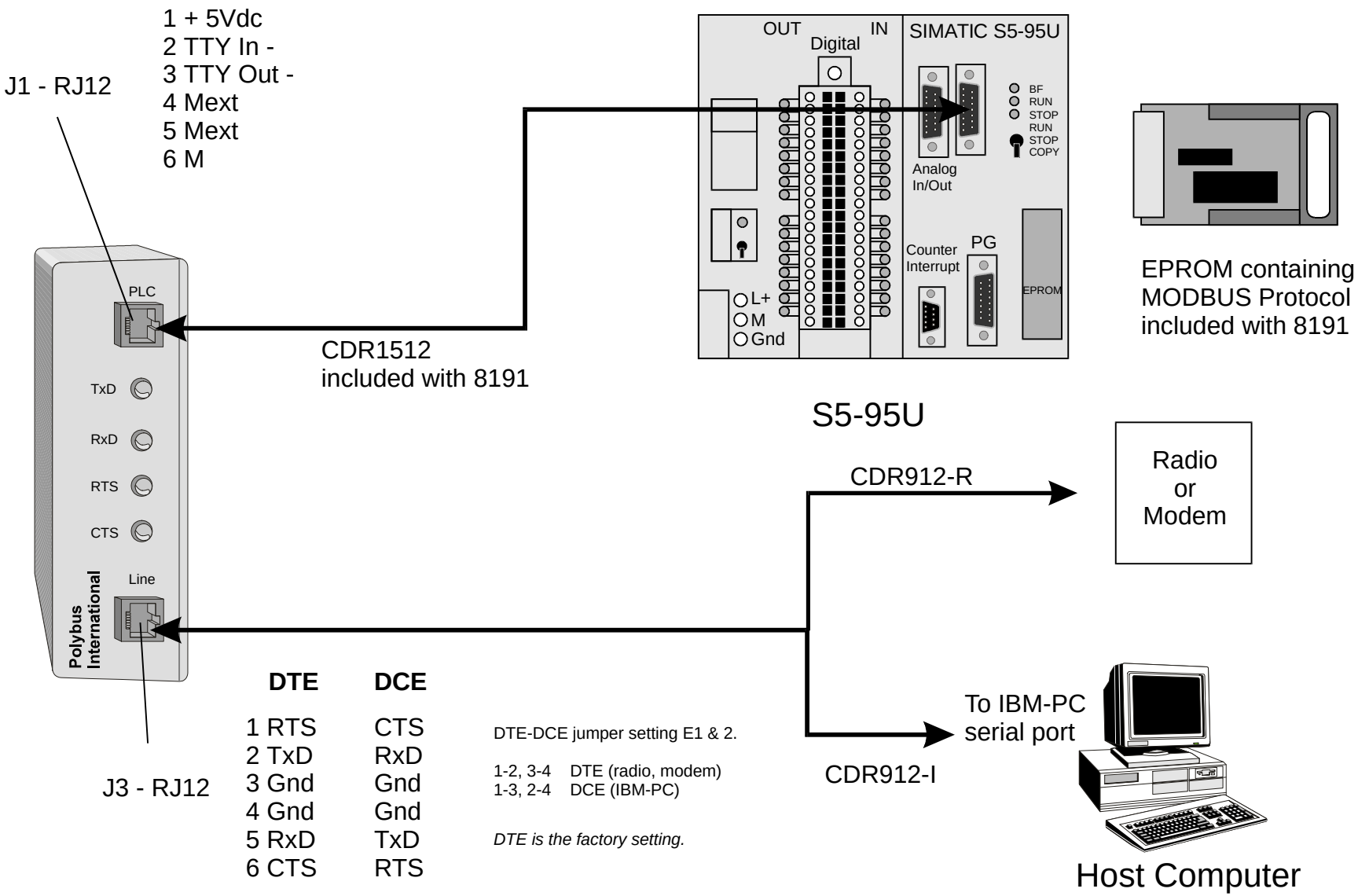

DTE	DCE
1 RTS	CTS
2 TxD	RxD
3 Gnd	Gnd
4 Gnd	Gnd
5 RxD	TxD
6 CTS	RTS

DTE-DCE jumper setting E1 & 2.

1-2, 3-4 DTE (radio, modem)
1-3, 2-4 DCE (IBM-PC)

DTE is the factory setting.

This document contains Proprietary advance information which shall not be reproduced or transferred to others without the written permission of Polybus International. Polybus International is not responsible for any errors or omissions in this documentation